By Kai Strunz, Ying Chen, and Yue Xia

Bridging Scales With the Shift Frequency

Frequency-adaptive simulation of multiscale transients in power systems.

©SHUTTERSTOCK.COM/LUMPPINI

ONE OF THE MOST REMARKABLE features of power and energy systems pertains to their extremely far-reaching scales, which are unique in the field of engineering. In continental Europe, for example, the synchronous ac power system integrates capitals from Lisbon to Warsaw and from Athens to Copenhagen. Reaching farther out to the north, high-voltage dc (HVdc) links connect to Sweden and the United Kingdom. And as in other regions of the world, those grids are being further developed to integrate more renewables. This only adds to the diversity of technologies in the power grids and contributes to the wide range of timescales involved. Those range from electrothermal interactions in the range of minutes over electromechanical transients within seconds, down to microseconds or even faster for the electromagnetic transients of traveling waves.

Digital Object Identifier 10.1109/MELE.2023.3320487
Date of current version: 28 November 2023

Although the coverage of all those scales in an efficient and accurate manner would be very desirable for power system analysis, two distinct types of tools have emerged to address distinct timescales. There are tools based on phasors, which are complex functions to represent amplitude, frequency, and phase. Such tools treat the natural sinusoidal ac voltages and currents by tracking their envelopes. From Figure 1, it can be appreciated that tracking the red-lined envelope requires significantly fewer sampling points compared with those that would be needed to accurately track the naturally occurring blue-lined sinusoidal waveform of carrier frequency f_c. Reducing the number of sampling points leads to a reduced computational effort in the discrete time domain. This makes phasors popular for studying phenomena such as electromechanical transients, where observation of the envelopes is illustrative.

With ac waveforms missing, phasors are not applicable to the modeling of dc power systems. Thus, in tools for the accurate representation of the natural waveforms occurring in dc systems, instantaneous signals are the basis. The same applies when tracking the natural waveforms in ac systems. This approach is followed in programs of type EMT (electromagnetic transients). Those tools were, as the name readily suggests, developed with a focus on electromagnetic transients.

For users looking for a holistic viewpoint, it is desirable to have the opportunity to analyze diverse transients without the need to switch among different tools. However, is it possible to unify and integrate the established and distinctly different approaches, based on phasors versus instantaneous signals, within one modeling methodology? The answer is "yes," and the key to the solution of a multiscale simulation is the introduction of the shift frequency. In the frequency-adaptive simulation of transients (FAST) method, the shift frequency sets the reference for other frequencies to relate to. Waveforms are then dealt with at the resulting frequency differences. Thus, for a zero shift, a 50-Hz sinusoid oscillates at 50 Hz. But the sinusoid appears at standstill for a shift frequency of 50 Hz, and this is because $50\,\text{Hz} - 50\,\text{Hz} = 0\,\text{Hz}$. As such, FAST merges the modeling approaches based on phasors and instantaneous signals.

FAST merges the modeling approaches based on phasors and instantaneous signals.

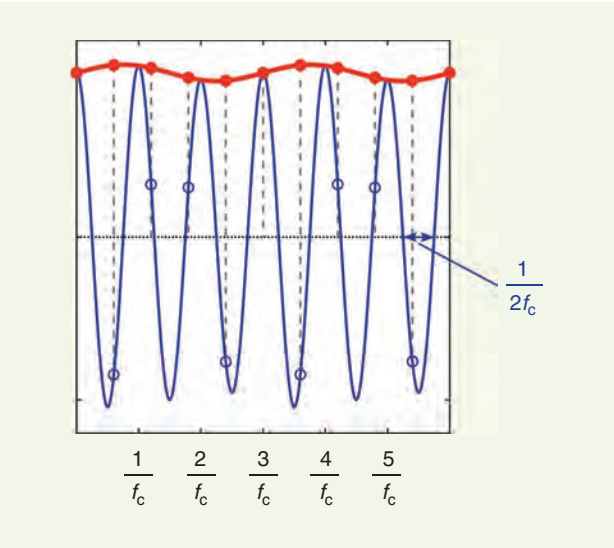

Figure 1. Envelope versus natural waveform tracking.

Evolving Methods and Needs

The value of multiscale simulation is best understood in the context of emerging, existing tools and needs. In the 1960s, the development of the EMT-type program began with the purpose of finding time responses of electromagnetic transients in arbitrary single- or multiphase networks with lumped and distributed parameters (as described in Dommel 1969 and Woodford et al. 1983). Key to the success of EMT-type programs has been the arrangement of the difference equations obtained through numerical integration of the differential equations that describe lumped inductive and capacitive network elements. The difference equations are arranged in such a way that lumped inductive and capacitive network elements are modeled through so-called companion models that involve only resistive elements and current sources. Connecting the companion models then gives the overall network model of the discrete time domain. A nodal analysis is performed to obtain the nodal conductance matrix and affiliated vectors, with the purpose of representing the overall network at discrete time steps.

As opposed to the nodal analysis used in EMT-type programs, modeling through dynamic-state equations leading to the state-space form has been the most popular method when it comes to the use of phasors that represent voltages and currents. The state-space form lends itself to stability analysis as a main application of such phasor-based models (as explained in Kundur 1994 and Maksimovic et al. 2001). In this context, it is important to distinguish between quasi-static and dynamic phasor calculus. In the quasi-static formulation, the behavior of network lines, cables, and transformers is described by a set of algebraic equations. As differential equations are omitted, the electromagnetic transients of the network itself are neglected. Such tools are sometimes referred to as transient stability (TS) simulators.

Experience has shown (as discussed in Vega-Herrera et al. 2021) that neglecting electromagnetic transients in the network is not appropriate when considering the

opportunities brought about by fast power-electronic controls in inverter-dominated grids. As a remedy, differential equations are considered for the modeling of network elements in dynamic phasor calculus. This leads to more accurate results and was shown to be appropriate for the study of controls of inverter-dominated grids. However, an efficient solution for the description of the propagation of electromagnetic waves along transmission lines has not been available in simulators based on dynamic phasors. Obviously, it is possible to approximate the distributed parameters of a transmission line by a sequence of connected π-sections of lumped elements to capture essential characteristics, such as the inductances and capacitances per-unit length. The accurate and efficient implementation of the solution to the wave equation first proposed by d'Alembert has, however, been available through companion models in EMT-type programs.

Thanks to the addition of the shift frequency, a 2D setting of simulation parameters is made possible.

The Shift Frequency as a Simulation Parameter

The high accuracy of EMT-type programs is achieved thanks to a combination of the application of proper numerical integration in the development of companion models and the use of algorithms that allow for an exact capturing of switching events. As integration methods, the trapezoidal method or a weight-averaged method combining trapezoidal and backward-Euler methods have been popular. Despite not originally developed for covering electromechanical transients, EMT-type programs do allow for the description of such slower transients too. In general, a larger time-step size may be used for numerical integration when studying waveforms that change at a lower rate.

Although a practical upper bound of the time-step size is given by the need to maintain a satisfactory accuracy of the numerical integration, it is also insightful to consider the time-step size limits given by Shannon's sampling theorem. According to this theorem, a waveform is sampled without distortion due to aliasing as long as the waveform bandwidth f_{max} is lower or equal to the Nyquist frequency f_{Ny}. The Nyquist frequency is defined as half the sampling rate, i.e., one over twice the time-step size, where the time-step size coincides with the interval between two sampling points, as indicated in Figure 1. Thus, the natural waveform of a sinusoid of 50 Hz may be sampled without aliasing at a time-step size of up to 10 ms, i.e., at a minimum sampling frequency of 100 Hz. In EMT simulation practice, the time-step size used to track the 50-Hz ac sinusoid will generally need to be much smaller than that, however, due to requirements of accuracy of the numerical integration involved. Even if a steady state is simulated, a sufficiently small time-step size must be chosen to allow for representation of the natural waveforms at the carrier frequency, for which 50 and 60 Hz are the typical values in power systems. To overcome the constraints regarding the desirable increase of the time-step size in the presence of an ac carrier waveform, the shift frequency was introduced.

2D Setting of the Shift Frequency and Time-Step Size

The shift frequency complements time-step size and constitutes a novel simulation parameter. Thanks to the addition of the shift frequency, a 2D setting of simulation parameters is made possible, as indicated in Figure 2.

The shift frequency f_s serves as the reference from which other frequencies are measured. In general, it is now the frequency difference with respect to the shift frequency, i.e., $f - f_s$, that is applicable when considering Shannon's sampling theorem. In this sense, there is no aliasing up to $f_{max} - f_s = f_{Ny}$. For $f_s = 50\,\text{Hz}$, a 50-Hz carrier may thus be sampled at a theoretically infinite time-step size without any aliasing appearing. This is because the 50-Hz carrier appears to be at a standstill for this setting.

Realizing Frequency Shifting

In a continuous time domain, the ac sinusoidal carrier may be represented by a signal of $A\cos(2\pi f_c t + \Phi)$. Using the complex exponential function, an alternative representation is given by $A/2\exp(j(2\pi f_c t + \Phi)) + A/2\exp(-j(2\pi f_c t + \Phi))$. As this alternative readily illustrates, the real oscillatory waveform is obtained by the superposition of a phasor rotating counterclockwise at a positive frequency f_c and a phasor rotating clockwise at a negative frequency $-f_c$.

However, shifting by f_s toward decreasing frequencies can be meaningful only if the signal to be shifted contains just positive frequencies. For the ac sinusoidal carrier, this would imply a complex extension of the carrier through an imaginary quadrature part to yield $A\cos(2\pi f_c t + \Phi) + jA\sin(2\pi f_c t + \Phi)$, i.e., $A\exp(j(2\pi f_c t + \Phi))$. The resulting complex exponential function describes a phasor rotating

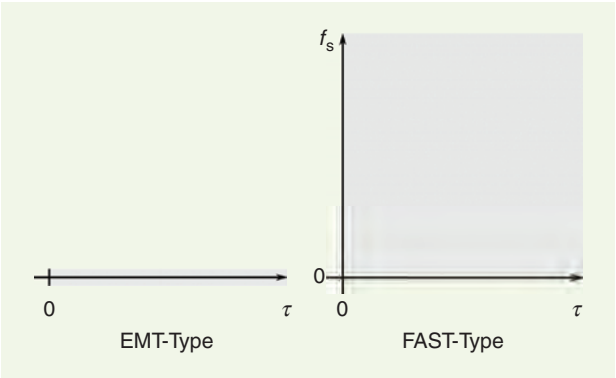

Figure 2. Toward 2D parameters in time and frequency domains.

counterclockwise at positive frequency f_c. Now, frequency shifting of the carrier by $f_s = f_c$ yields $f_c - f_s = 0$ Hz and so eliminates the oscillation. In general, to support frequency shifting in multiscale simulation of ac power systems, all waveforms are modeled through analytic signals, which are composed of the original real signals and imaginary quadrature components. The imaginary part of an analytic signal relates to the real part through the Hilbert transform the application of which is illustrated in Figure 3. Shifting of the analytic signal is then possible, as shown in Figure 4.

Just as with the time-step size, the shift frequency may be constant or kept variable during a simulation. A shift frequency of 0 Hz is recommended when dc transients are observed. For slow transients visibly modulating the ac carrier as well as for electromagnetic transients above the ac carrier frequency, a shift-frequency setting of f_c is recommended. Depending on the situation observed, locational and temporal modifications of the shift frequency are possible. The observation of events, such as contingencies or the monitoring of spectra, could be used as input of methods aimed at setting the shift frequency in an adaptive manner.

Recent research on power-electronic dominated ac microgrids has shown a time-step size of 50 ms at $f_s = f_c$ to be practical during transients such as those triggered by typical load changes. Instead, a time-step size of about 50 μs is commonly needed for corresponding studies when using instantaneous signals. As such, the number of time-steps is 1,000 times more than it is without the shift frequency being available. This is indicative of the efficiency gains made possible through the application of frequency shifting.

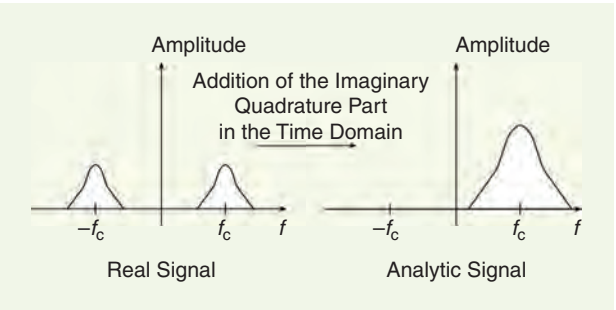

Figure 3. The modification of the frequency spectrum by including the imaginary quadrature part.

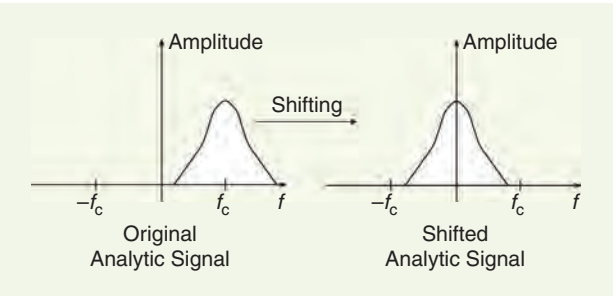

Figure 4. The effect on the frequency spectrum when the shift frequency equals carrier frequency.

Network Modeling

As the size of the power grid to be modeled can vary greatly, the capability to efficiently and accurately represent both lumped and distributed parameters is important. As such, a variety of local phenomena, from slow-changing transients to electromagnetic waves traveling along transmission lines, are of interest in the consideration of diverse scales. Because companion models used in EMT-type programs have been shown to be effective in representing lumped elements and in offering solutions to the wave equation, this approach is also compatible with FAST-type multiscale simulation.

Lumped Parameters

In EMT-type programs, the difference equations derived from differential equations describing inductive and capacitive elements are arranged to describe resistive elements in parallel with current sources. As mentioned in the previous section, it has been a success factor of the EMT-type simulation that, at each time step, the solution process is only concerned with resistive networks and sources. With the introduction of FAST, the same general principle of using companion models is followed. Instead of just resistances, the lumped elements are now described by impedances, and the sources involve complex instead of real signals (as documented in Strunz et al. 2006 and Zhang et al. 2010).

The emergence of a companion model for an inductor is illustrated in Figure 5. The FAST-type companion model shows a complex admittance $\underline{G}_L$ and a complex history current source $\underline{\eta}_L$, which refers to the past time step. The EMT-type companion model is a special case of the more generic FAST-type formulation and is obtained for a shift-frequency setting of 0 Hz. In this special case, the

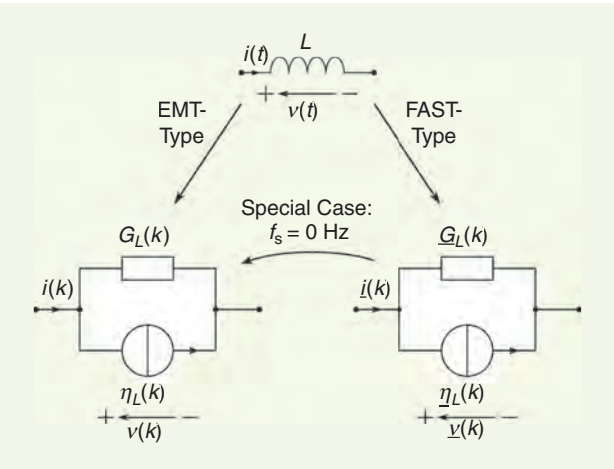

Figure 5. Companion models of inductive lumped element in EMT- and FAST-type simulators.

imaginary parts in the FAST-type companion models disappear. Thus, the complex admittance $\underline{G}_L$ becomes a real-valued conductance G_L.

Distributed Parameters

The parameters of transmission systems are given in per-unit length because the distributed effects of the medium are noticeable. For the purpose of illustrating basic principles, the modeling of a lossless single-phase transmission line with constant parameters is considered. As indicated in Figure 6, the line is assumed to be of length l, and the inductance and capacitance per-unit length are given by L' and C', respectively. For such a line, wave equations can be readily formulated.

The solution to the wave equations describes propagations of traveling waves along the transmission line. The EMT-type solution is achieved using the companion model shown on the left. The companion model is applicable as long as the time-step size is smaller than the time interval T_{wp} which the waves need to travel between both line ends. At both line ends, the currents are calculated by the division through the wave impedance plus a current source component that considers the traveling wave coming from the other side. Because T_{wp} exceeds the time-step size, both line ends of the companion model are not topologically coupled for the length of the time-step size.

EMT-type companion model is a special case of the more generic FAST-type formulation and is obtained for a shift-frequency setting of 0 Hz.

The FAST-type multiscale model is valid for any time-step size. If the traveling time T_{wp} becomes lower or equal to the time-step size, then a π-section model is seamlessly inserted to establish the topological coupling during the time-step interval. The EMT-type model is a special case of the FAST-type model for a shift frequency of $f_s = 0$ Hz and T_{wp} exceeding the time-step size. Thus, as for the modeling of lumped parameters, FAST offers a generalization of the EMT-type companion model. The shift frequency, as a novel simulation parameter, enables the flexibility to cover multiscale transients, which includes the EMT-type solution as a special case.

Application

Multiscale modeling and simulation integrates the virtues of dynamic phasor calculus and EMT-type programs within one unified framework and also becomes available through tools such as CloudPSS or when combined with simulator PSCAD (with a further description given in Rupasinghe et al. 2023). As such, multiscale modeling also bridges the scopes. This becomes evident from studies elaborated upon in the following.

Wind Energy Conversion System

According to the Global Wind Energy Council, 2023 was the first year for which the addition of global wind power

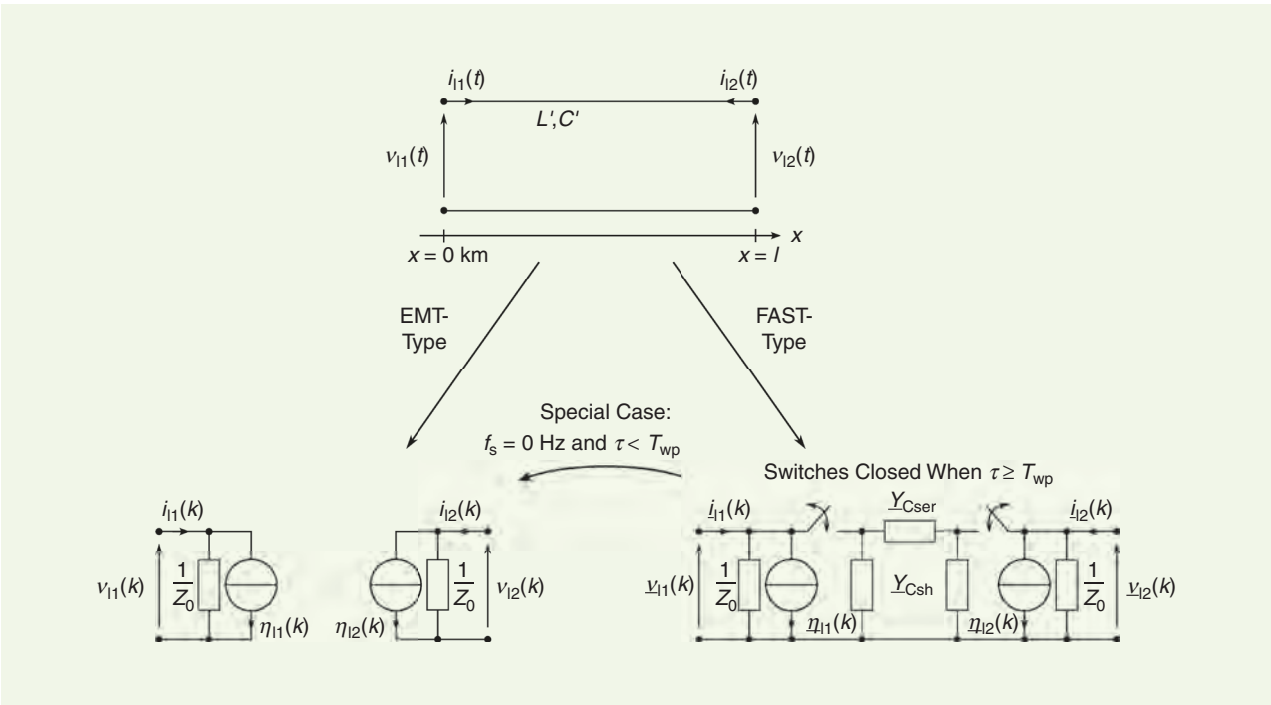

Figure 6. Companion models of lossless line in EMT- and FAST-type simulators.

capacity exceeded 100 GW. Even higher annual numbers of installation are predicted over the coming years. Contributions from wind energy conversion systems (WECSs) are essential when it comes to enhancing the share of renewable sources in electric power generation. WECS technology has become ever more sophisticated.

The development of WECSs relies on the integration of diverse and complementary technologies. The corresponding subsystems are exemplarily illustrated in Figure 7 for a WECS where electric power generation is facilitated via a doubly fed induction generator (DFIG). As a part of the function of the mechanical subsystem, the translational kinetic energy associated with the wind is partially converted into rotational kinetic energy through the action of the turbine, thus resulting in a mechanical torque on the drivetrain. The latter consists of a low-speed shaft, high-speed shaft, and gearbox in between.

Via the high-speed shaft, a mechanical torque is applied to the rotor of the DFIG, which serves to convert rotational kinetic energy into electric energy to be processed in the electrical subsystem. In this configuration, the DFIG is a wound-rotor induction machine where the stator windings are directly connected to the grid via a transformer, while the rotor windings are connected to the grid via two back-to-back voltage-sourced converters (VSCs) with a dc link capacitor in between, a filter, and the transformer. The crowbar circuit involves resistors that may be inserted by controlling thyristors in situations where it is necessary to limit rotor currents for the purpose of protection.

Due to the ability of the back-to-back VSCs to control the rotor-side voltages and currents at frequencies other than the grid frequency, the DFIG-based WECS is suitable for variable-speed wind turbine application. Also, thanks to the back-to-back VSCs, controlled reactive power exchanges over the point of common coupling (PCC) with the grid are possible.

The objective of the rotor-side control scheme is to regulate both the active power and the reactive power on the stator side. In this context, the vector control approach is widely used for the rotor-side converter. It is performed in a stator flux dq-reference frame, leading to a decoupled consideration of active power and reactive power via the rotor current $\mathbf{i}_{abcr}$. The stator flux vector may be calculated using stator current $\mathbf{i}_{abcs}$ and stator voltage $\mathbf{v}_{abcs}$. The active power on the stator side is controlled by adjusting the rotor speed ω_r, for example, by following an optimal value so that the wind turbine operates around a maximum power point. The reactive power on the stator side is controlled by means of rotor current regulation. The grid-side control scheme maintains the dc bus voltage v_{dc} and adjusts the reactive power flowing through the filter toward the grid. The grid-side converter current $\mathbf{i}_{abcg}$ is measured for this purpose. Outputs of the rotor- and grid-side controls are the pulsewidth modulation signals for the respective VSCs.

To avoid disconnection of the DFIG during grid faults, crowbar protection is widely used. When the dc bus voltage or the rotor current exceeds threshold values, the

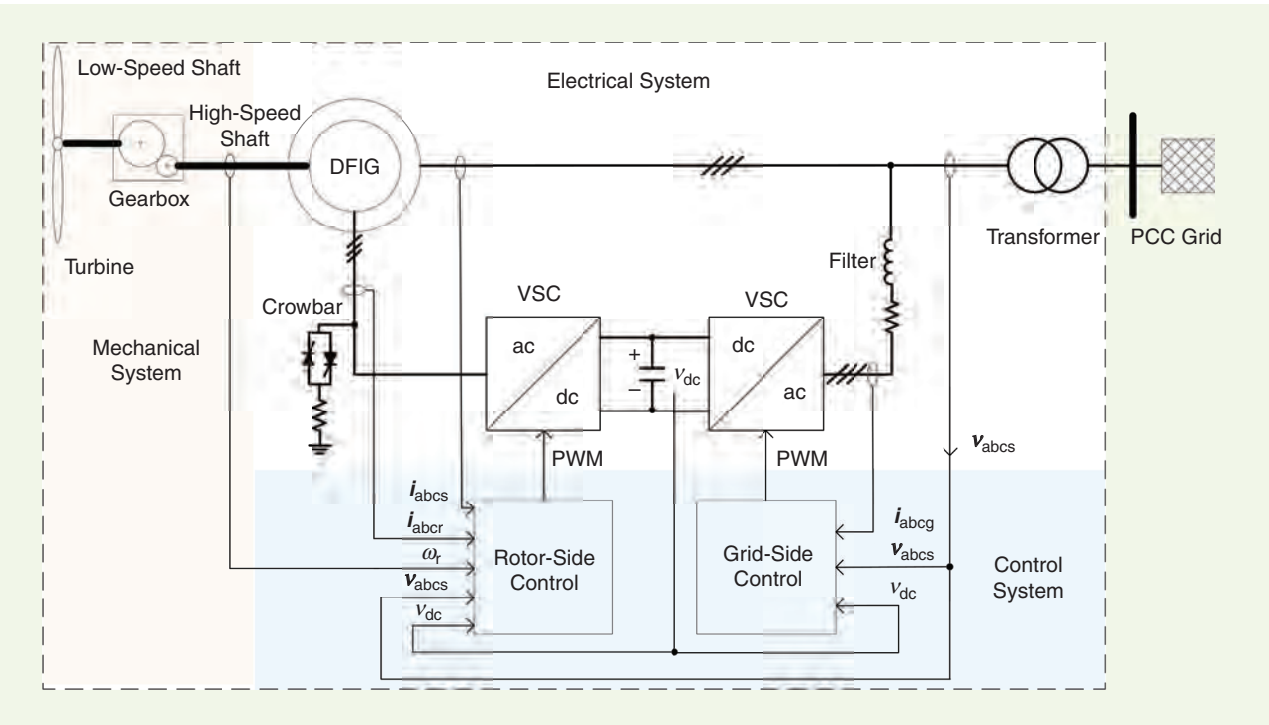

Figure 7. A WECS based on doubly fed induction generator (DFIG) technology. PCC: point of common coupling; PWM: pulsewidth modulation; VSC: voltage-sourced converter.

rotor-side converter is blocked and the crowbar circuit is activated. The DFIG rotor currents flow through the crowbar instead of the rotor-side converter. When the grid fault is cleared and the rotor current decays to a safe value, the crowbar is removed. The rotor-side converter resumes its operation. The key to this protection technique is limiting the high currents and providing a bypass in the rotor circuit via the crowbar.

Along with the growth of wind power capacity available in the grid, WECSs are known to influence power system transients over a wide range of frequencies. Both low-frequency transients, such as subsynchronous oscillations, and high-frequency transients, e.g., those caused by short circuits, can appear. EMT-type programs are well suited for studying the behavior of high-frequency electromagnetic transients related to WECSs. If it is of interest to study both low- and high-frequency transients within the same study of WECSs, FAST offers an efficient and accurate solution, as discussed hereafter (with simulation data taken from Xia et al. 2020).

Initially, a WECS is assumed to operate close to steady state with a generated active power of roughly 1.5 MW. The time-step size τ is set to 8 ms, and the shift frequency f_s is at 60 Hz in the ac parts of the circuit. The envelope of the ac current is used to represent the steady state. The phase-a current flowing through the rotor-side converter is shown in Figure 8, while the active and reactive power flows into the grid are given in Figure 9.

At $t = 0.25$ s, a three-phase-to-ground fault occurs at the PCC. Electromagnetic transients are triggered. As a consequence of the fault, the rotor-side VSC is blocked, and the crowbar circuit is activated so that the DFIG rotor currents flow through the crowbar instead of the rotor-side VSC.

To focus on those details, natural waveforms are tracked at $\tau = 10$ μs and $f_s = 0$ Hz. The fault is assumed to be cleared at $t = 0.4$ s. With the rotor currents quickly returning to tolerable values thereafter, the crowbar resistors are disconnected and the rotor-side VSC resumes control of active and reactive power flows. After approximately $t = 0.8$ s, electromechanical transients become increasingly dominant. As such, FAST returns to envelope tracking at $f_s = 60$ Hz in the ac parts of the circuit, and the time-step size τ is set to 8 ms again.

Figures 8 and 9 show the curves from EMT- and FAST-type simulation results. No differences can be seen during periods of tracking natural waveforms. Only when FAST employs envelope tracking at large time-step sizes are there obvious differences in how the information is represented because the EMT-type simulation always follows natural waveforms.

Wide-Area Energy System

Beyond WECSs, it is important to understand multiscale transients of other power and energy resources as well as their systemic interactions through the power grid. The following case study illustrates the value of such modeling and simulation for a situation in China with regard to grid development for increasing the share of renewable power. In this context, the CloudPSS program makes use of the FAST method, and it is widely used for such purposes and beyond.

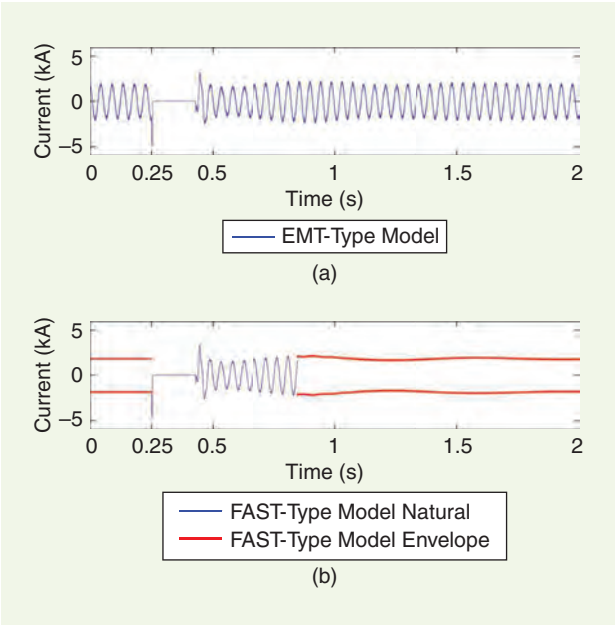

Figure 8. The phase-a current of the rotor-side converter. (a) EMT-type model. (b) Natural and envelope waveforms in FAST-type model. The nonbold line depicts a natural waveform, while the bold lines represent envelope waveforms.

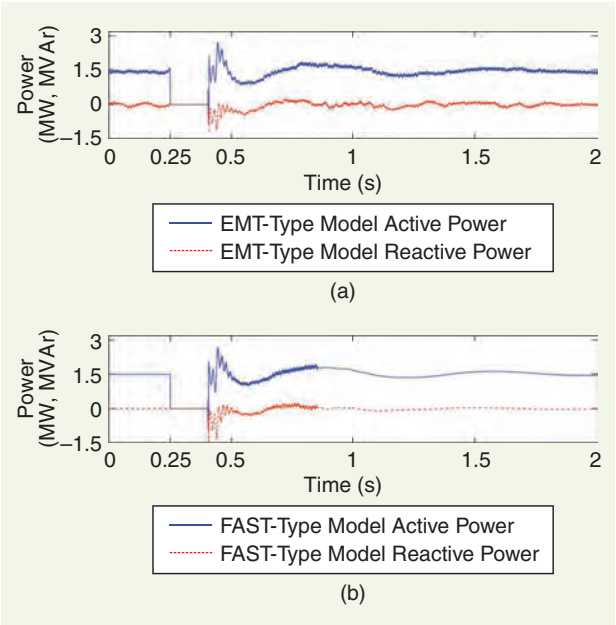

Figure 9. The active power and reactive power at the PCC. (a) EMT-type model. The solid lines represent active power, while the dashed lines depict reactive power. (b) FAST-type model. The solid lines represent active power, while the dashed lines depict reactive power.

The layout of a power system model describing a fictitious extended West–East China regional interconnected system is depicted in Figure 10. The test system consists of 12,609 buses with 248 synchronous generators, 1,864 transmission lines, 778 transformers, and 571 loads. The connection of the Western and Eastern 50-Hz ac subsystems relies on the ±320-kV HVdc system shown in the center. The HVdc converter stations are based on VSC technology.

With the availability of FAST, an efficient and accurate multiscale transients simulation of a wide-area system is possible.

The three large-scale renewable power stations, denoted by G1, G2, and G3, involve multiple wind and solar parks. In steady state, those three stations, G1, G2, and G3, are able to provide a real power of the order of 1200, 800, and 600 MW, respectively. In the observed scenario, a three-phase-to-ground fault happens at bus NJ at time point $t = 0.5$ s, following an initial stage of steady state. Such a fault triggers electromagnetic transients. The fault is cleared after five cycles, followed by a recovery process. At roughly $t = 1$ s, fast electromagnetic transients have largely damped out, making it practical to track envelope waveforms thereafter.

An EMT-type program may be used for analyzing the fault and the recovery. Because envelope waveforms are not available, the time-step size to be used in the EMT-type program would need to be rather small. This is necessary even throughout periods of transients of low frequencies; for example, in an advanced stage of recovery. The resulting computational effort reduces the scope of practical application in a wide-area energy system analysis. The issue is addressed by the flexibility of FAST in that both the tracking of envelope and of natural waveforms is supported. During stages of low-frequency electromechanical transients or at close to the steady state, the time-step size is chosen commensurate with envelope tracking. During stages of expected fast electromagnetic transients following faults and during the initial stage of the recovery, natural waveform tracking is pursued with a time-step size as in EMT-type programs.

The simulation results are compared in Figures 11 and 12. There are no differences observed in accuracy between the multiscale simulation and the corresponding EMT-type simulation for both currents and voltages. With the availability of FAST, an efficient and accurate multiscale transients simulation of a wide-area system is possible. The system scales may no longer be considered as a limitation to practical application.

Conclusions

The past decades have seen the transformation of power and energy systems into a heterogeneous entity involving increasingly diverse technologies. This process is largely driven by the objective of moving toward a zero-carbon society and by the need for energy security. The transformation is still very much ongoing and is set to continue for decades to come, further increasing the multiscale character of power and energy systems. With FAST, there is a method at hand for bridging those scales in modeling and simulation. As the term *FAST* suggests, additional flexibility is attained by a complementary focus on the

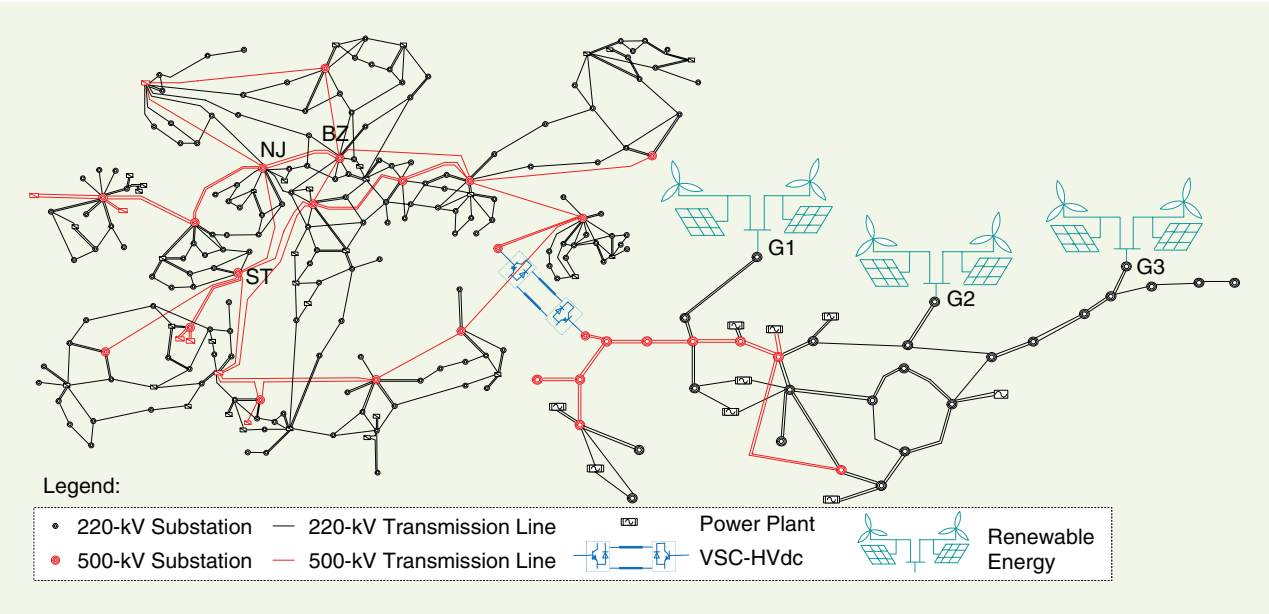

Figure 10. West–East China regional interconnected ac/dc system.

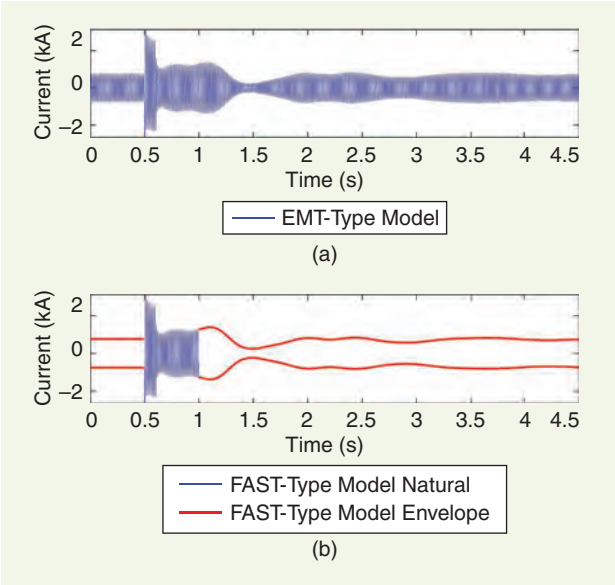

Figure 11. The phase-a current of ST-NJ transmission line. (a) EMT-type model. (b) Natural and envelope waveforms of FAST-type model. The nonbold lines depict a natural waveform, while the bold lines represent an envelope waveform.

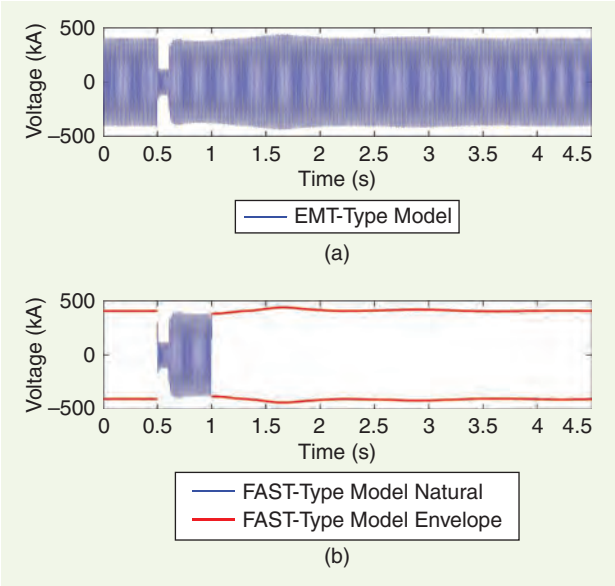

Figure 12. The phase-a voltage of the ST side of ST-NJ transmission line. (a) EMT-type model. (b) Natural and envelope waveforms of FAST-type model. The nonbold lines depict a natural waveform, while the bold lines represent an envelope waveform.

frequency domain. The shift frequency, as a key modeling parameter, determines the reference to which other frequencies refer. It may be set equal to the ac carrier frequency to effectively support dynamic phasor calculus. It may also be set to zero when dc transients are of interest. In the case of a shift frequency equal to zero, EMT-type modeling, with its particular virtues, appears as a special case. EMT-type modeling, of course, supports the adaptive setting of the time-step size regarding the sampling of waveforms in the time domain. However, a true multiscale character, with all its benefits in modeling and simulation, is only achieved by the simultaneous consideration of parameter settings in the time and frequency domains. It is this opportunity of 2D parameter setting that is at the heart of FAST, and that is effective and practical in the analysis of heterogeneous resources and wide-area power and energy systems. As such, the ability of bridging the scales also supports the ability of supporting the ongoing process of analyzing and enhancing the capabilities of power and energy systems.

Acknowledgment

Supported by Deutsche Forschungsgemeinschaft (DFG) under Grant 410829522.

For Further Reading

H. W. Dommel, "Digital computer solution of electromagnetic transients in single-and multiphase networks," *IEEE Trans. Power App. Syst.*, vol. PAS-88, no. 4, pp. 388–399, Apr. 1969, doi: 10.1109/TPAS.1969.292459.

D. A. Woodford, A. M. Gole, and R. W. Menzies, "Digital simulation of DC links and AC machines," *IEEE Trans. Power App. Syst.*, vol. PAS-102, no. 6, pp. 1616–1623, Jun. 1983, doi: 10.1109/TPAS.1983.317891.

P. Kundur, *Power System Stability and Control*. New York, NY, USA: McGraw-Hill, 1994.

D. Maksimovic, A. M. Stankovic, V. J. Thottuvelil, and G. C. Verghese, "Modeling and simulation of power electronic converters," *Proc. IEEE*, vol. 89, no. 6, pp. 898–912, Jun. 2001, doi: 10.1109/5.931486.

J. Vega-Herrera, C. Rahmann, F. Valencia, and K. Strunz, "Analysis and application of quasi-static and dynamic phasor calculus for stability assessment of integrated power electric and electronic system," *IEEE Trans. Power Syst.*, vol. 36, no. 3, pp. 1750–1760, May 2021, doi: 10.1109/TPWRS.2020.3030225.

K. Strunz, R. Shintaku, and F. Gao, "Frequency-adaptive network modeling for integrative simulation of natural and envelope waveforms in power systems and circuits," *IEEE Trans. Circuits Syst. I, Reg. Papers*, vol. 53, no. 12, pp. 2788–2803, Dec. 2006, doi: 10.1109/TCSI.2006.883864.

P. Zhang, J. R. Marti, and H. W. Dommel, "Shifted-frequency analysis for EMTP simulation of power-system dynamics," *IEEE Trans. Circuits Syst. I, Reg. Papers*, vol. 57, no. 9, pp. 2564–2574, Sep. 2010, doi: 10.1109/TCSI.2010.2043992.

J. Rupasinghe, S. Filizadeh, D. Muthumuni, and R. Pavari, "A multi-solver framework for co-simulation of transients in modern power systems," *Electric Power Syst. Res.*, vol. 223, Oct. 2023, Art. no. 109659, doi: 10.1016/j.epsr.2023.109659.

Y. Xia, Y. Chen, Y. Song, and K. Strunz, "Multi-scale modeling and simulation of DFIG-based wind energy conversion system," *IEEE Trans. Energy Convers.*, vol. 35, no. 1, pp. 560–572, Mar. 2020, doi: 10.1109/TEC.2019.2953893.

Biographies

Kai Strunz (kai.strunz@tu-berlin.de) is with Technische Universität Berlin, 10587 Berlin, Germany.

Ying Chen (chen_ying@tsinghua.edu.cn) is with Tsinghua University, Beijing 100084, China.

Yue Xia (yue.xia@cau.edu.cn) is with China Agricultural University, Beijing 100083, China.